The 7801FC VistaLINK® Frame Controller card provides a single point of access to communicate with VistaLINK® -capable modules. The 7801FC VistaLINK® Frame Controller provides a 10Base-T/100Base-TX/1000 Base-TXEthernet port, and communication is facilitated through the use of Simple Network Management Protocol (SNMP).

The 7801FC VistaLINK® Frame Controller handles all SNMP communications between the frame (7801FR) and the network manager (NMS), and serves as a gateway to individual cards in the frame.

Features & Benefits

- Complies with IEEE 802.3 10BASE-T, 100BASE-TX and 1000BASE-TX Ethernet standards
- 1000Mb/s Gigabit Ethernet, 100Mb/s Fast Ethernet or 10Mb/s Ethernet data transfer, selected by auto negotiation
- Full-duplex or half-duplex operation, selected by auto-negotiation
- RJ-45 connector for network cable connection
- Card edge LEDs indicate module fault, microprocessor state, activity and link status
- Rear panel LEDs indicate Ethernet link, activity and speed
- Supports “ftp” upgrades for frame-wide firmware upgrades (product specific)
- Includes VistaLINK® PRO (VLPRO-C) module software configuration tool
- Provides frame/chassis status information through VistaLINK® including power supply status, frame status, card insertion/removal counters, 7801FC software version number and LED control
- Provides an onboard web interface to directly control modules that support WebEASY

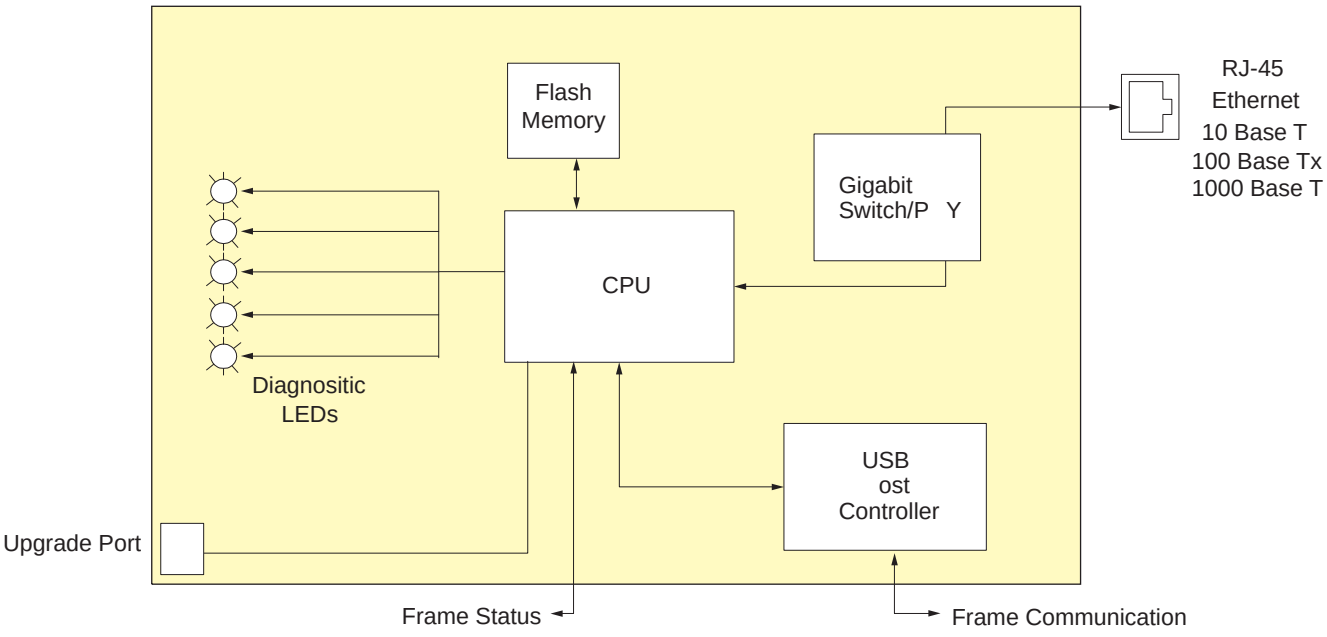

Specifications

Ethernet:
Network Type: IEEE 802.3 (10BASE-T)
IEEE 802.3u (100BASE-TX)
IEEE 802.3ab (1000BASE-TX)
Connector: RJ-45

Electrical:
Voltage: +12V DC
Power: 8W
EMI/RFI: Complies with FCC Part 15, Class A
EU EMC directive

Physical (number of slots):
7801FR: 0 (User dedicated slot)

Ordering Information

7801FC	VistaLINK® Frame Controller

Enclosure
7801FR 1RU Multiframe which holds up to 4 single slot modules

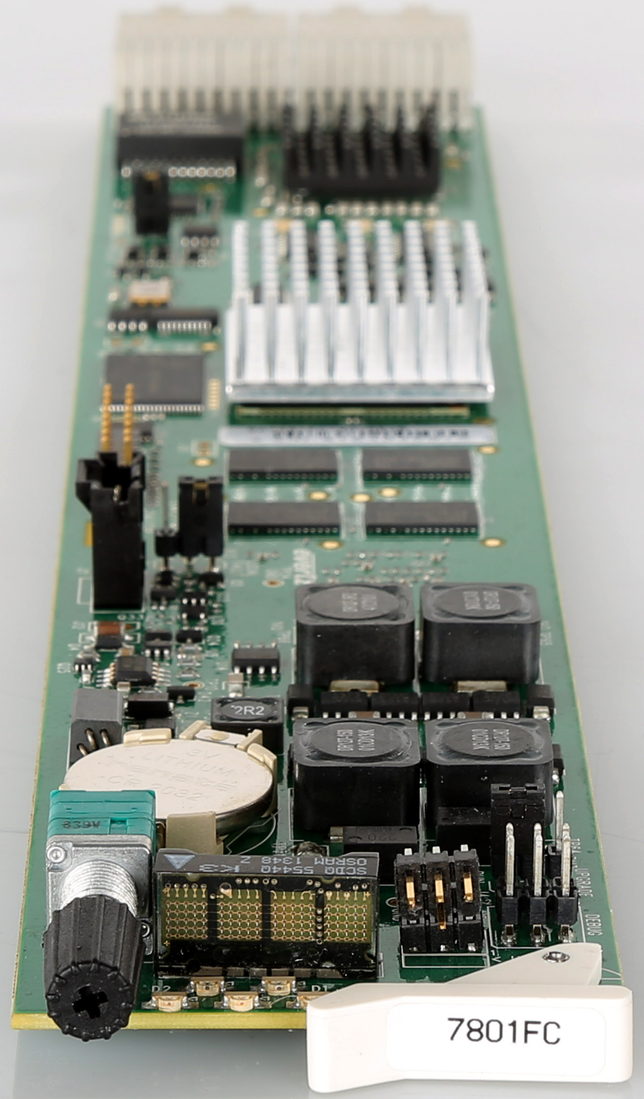
7801FC

pulse
H5007NL
1332-MT CHINA

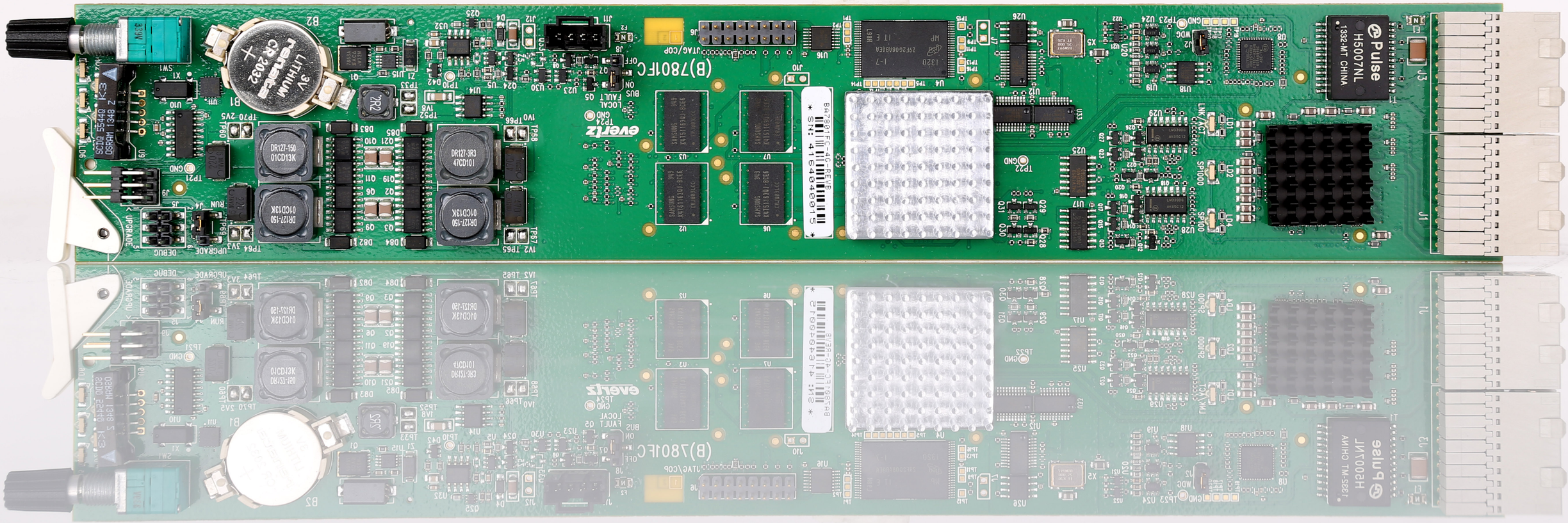
Pulse
H5007NL
1332-MT CHINA
(B)7801FC
3V LITHIUM
renata
CR2032
DR127-150
01CD13K
DR127-3R3
47CD101
evertz

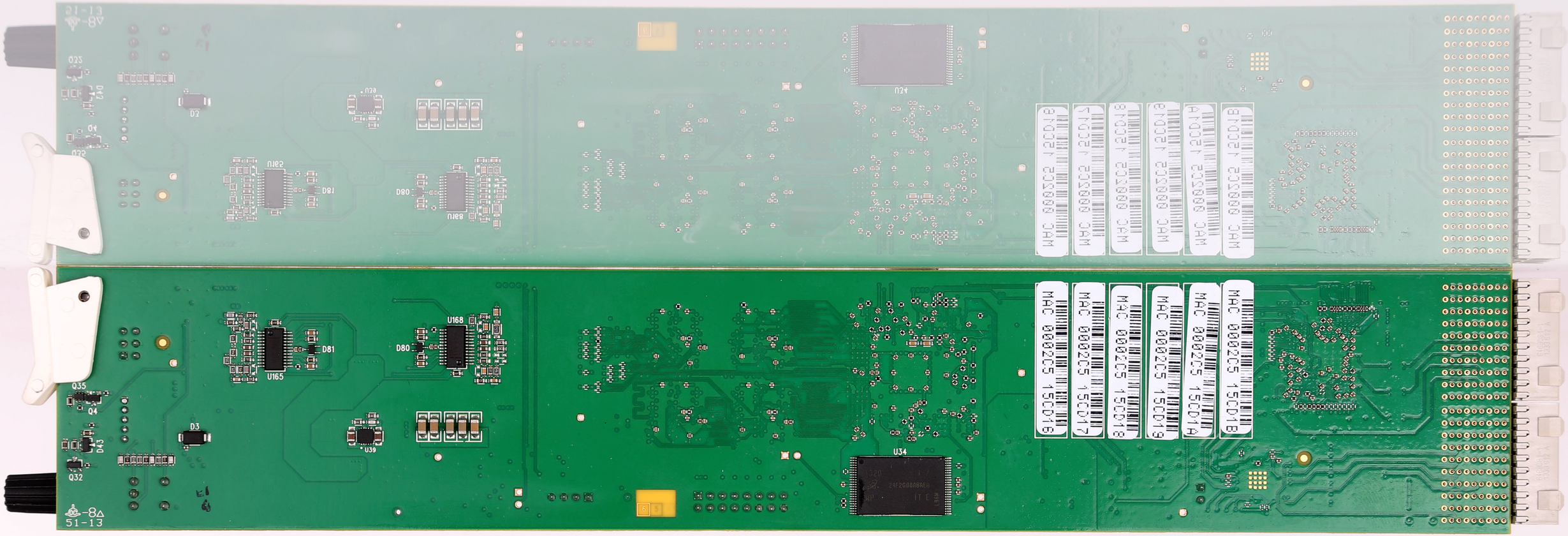
U168
D81
D80
U165
U39
Q35
Q4
D3
D43
Q32
U34
51-13