7700DA7-3G

3G/HD/SD-SDI Reclocking Distribution Amplifier

The 7700DA7-3G reclocking distribution amplifiers provide inexpensive distribution of your SMPTE 424M, SMPTE 292M and SMPTE 259M serial digital video signals at rates of 3Gb/s, 1.5Gb/s and 270Mb/s. The DA supports all other all other SMPTE 344M, SMPTE 259M, SMPTE 310M and DVB-ASI data rates in a non-reclocked mode (540Mb/s, 360Mb/s, 143Mb/s, 19.4Mb/s).

Ideal in applications where a large quantity of outputs is required, the DA features an auto-equalized input with seven isolated reclocked outputs.

The 7700DA7-3G occupies one card slot and can be housed in a 1RU frame which will hold up to 3 modules, a 3RU frame which will hold up to 15 modules, a 350FR portable frame which will hold up to 7 modules or a standalone enclosure that will hold 1 module.

Features & Benefits

- Normal reclocked mode for SMPTE 424M (3Gb/s), SMPTE 292M (1.5Gb/s) and SMPTE 259M (270Mb/s)
- Remote selectable non-reclocked mode for all other SMPTE 344M, SMPTE 259M, SMPTE 310M and DVB-ASI data rates
- Fully hot-swappable from front of frame with no BNC disconnect required
- Tally output on Frame Status bus upon loss of input signal for quality monitoring
- VistaLINK® capable for remote monitoring, control and configuration capabilities via SNMP; using VistaLINK® PRO, CP-2116E or CP-2232E Control Panels. VistaLINK® is available when modules are used with the 3RU 7800FR frame and a 7700FC VistaLINK® Frame Controller module in slot 1 of the frame

Status LEDs:
- Detected Signal Rate LEDs
- Control Mode LED
- Module Health Status

Input:
- SMPTE 424M (3Gb/s), SMPTE 292M (1.5Gb/s), SMPTE 259M (270Mb/s) when reclocking
- SMPTE 344M (540Mb/s), SMPTE 259 (360Mb/s, 143Mb/s), SMPTE 310M when not reclocking
- Return Loss > 15dB to 1.5GHz and > 10dB up to 3GHz
- Auto equalization to 80m at 3Gb/s, 140m @ 1.5Gb/s and 350m @ 270Mb/s

Output:
- 7 reclocked outputs
- Wideband jitter < 0.2 UI HD
- Wideband jitter < 0.3 UI 3G

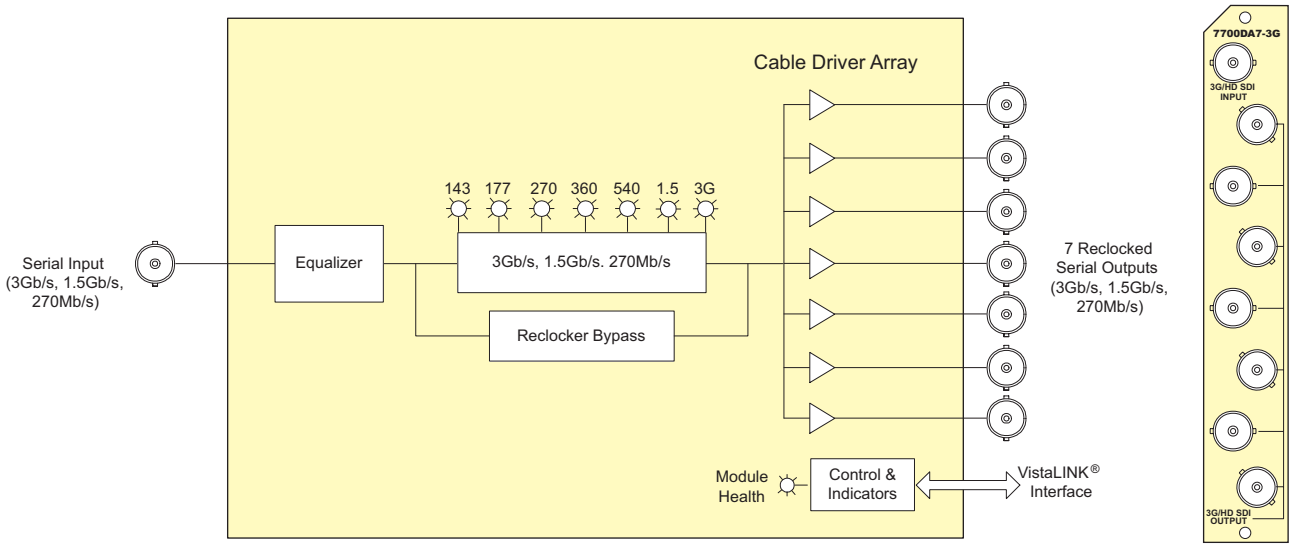

Specifications

Serial Video Input:

Standards	
Reclocked Mode:	SMPTE 424M (3Gb/s) SMPTE 292M (1.5Gb/s) SMPTE 259M (270Mb/s)
Non Reclocked Mode:	SMPTE 344M (540Mb/s) SMPTE 259M (360Mb/s, 143Mb/s) SMPTE 310M (19.4Mb/s), DVB-ASI
Connector:	BNC per IEC 61169-8 Annex A
Equalization:	Automatic to 80m @ 3Gb/s, 150m @ 1.5Gb/s & 350m @ 270Mb/s
Return Loss:	> 15dB up to 1.5GHz > 10dB up to 3GHz

Serial Video Output:

Number of Outputs:	7 Reclocked
Connector:	BNC per IEC 61169-8 Annex A
DC Offset:	0V ± 0.5V
Rise and Fall Time:	150ps @ 3G/HD, 470ps SD nominal
Wideband Jitter:	< 0.2 UI HD < 0.3 UI 3G

Physical (number of slots):

350FR:	1
7700FR-C:	1
7800FR:	1

Electrical:

Voltage:	+12V DC
Power:	5W
EMI/RFI:	Complies with FCC Part 15, Class A EU EMC Directive

Ordering Information

7700DA7-3G	3G/HD/SD-SDI Reclocking Distribution Amplifier
Ordering Options	Rear Plate and Fiber Connector must be specified at time of order Eg: Model +SC +3RU

Rear Plate Suffix

+3RU	3RU Rear Plate for use with 350FR, 7700FR-C or 7800FR Multiframe
+1RU	1RU Rear Plate for use with 7701FR Multiframe
+SA	Standalone Enclosure Rear Plate

Accessories

7700FC	VistaLINK® Frame Controller
CP-2116E-H	Remote Control Panel
CP-2232E	Remote Control Panel

Enclosures:

350FR	3RU Portable Multiframe which holds up to 7 single slot modules
7700FR-C	3RU Multiframe which holds up to 15 single slot modules
7800FR	3RU Multiframe which holds up to 15 single slot modules
7701FR	1RU Multiframe which holds up to 3 single or dual slot modules
S7701FR	Standalone enclosure

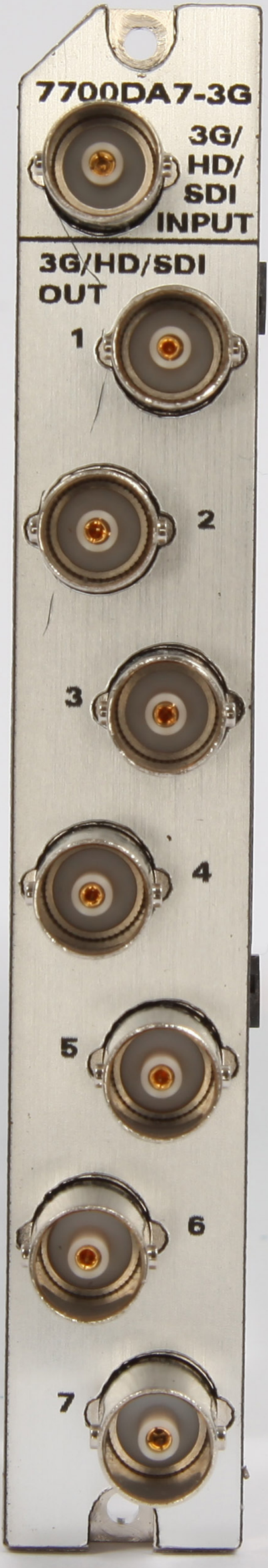
7700DA7-3G
3G/
HD/
SDI
INPUT
3G/HD/SDI
OUT
1
2
3
4
5
6
7

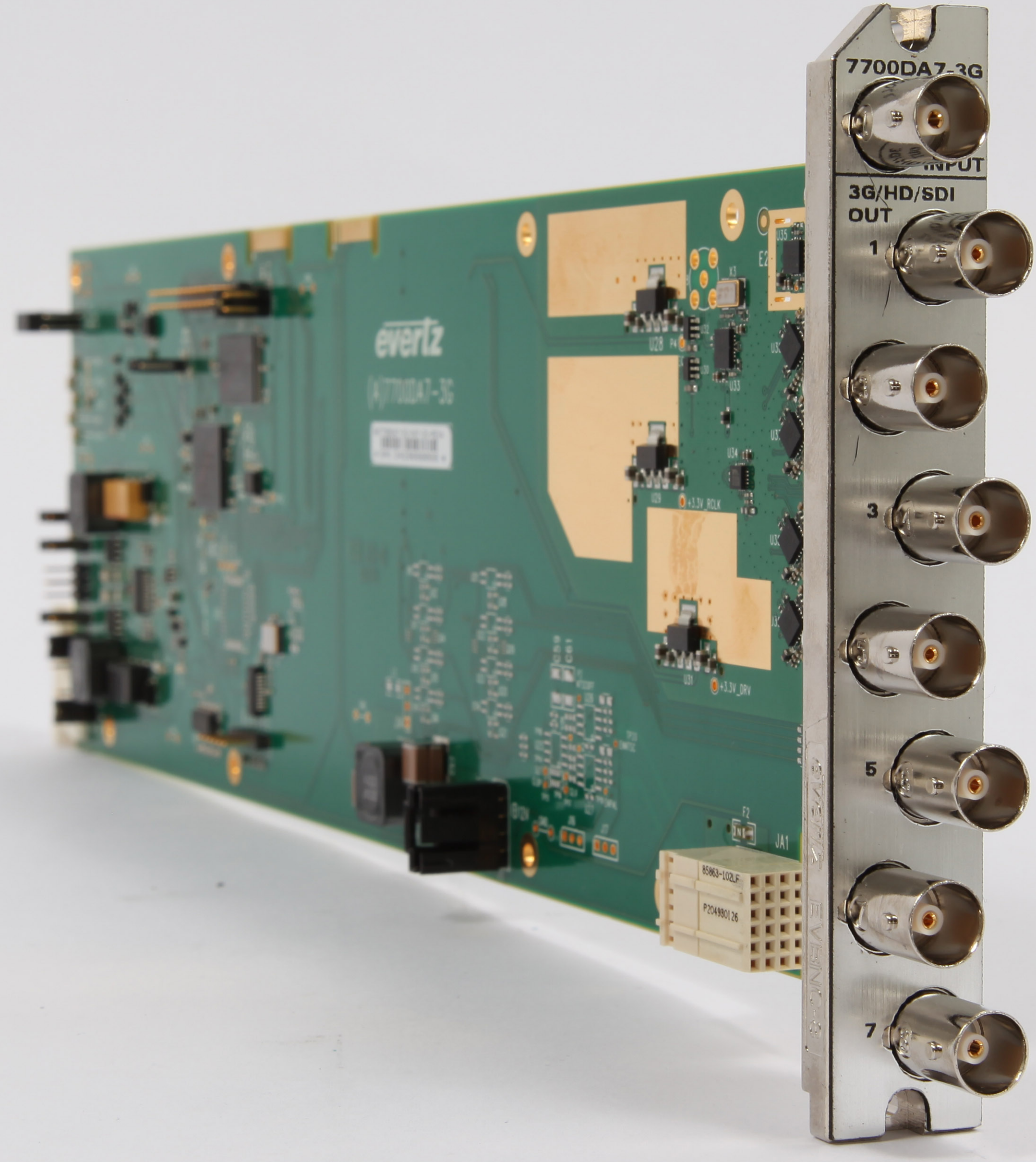
7700DA7-3G
INPUT
3G/HD/SDI
OUT
1
3
5
7
EVERTZ
everitz
JA1
85863-102LF
P204980126

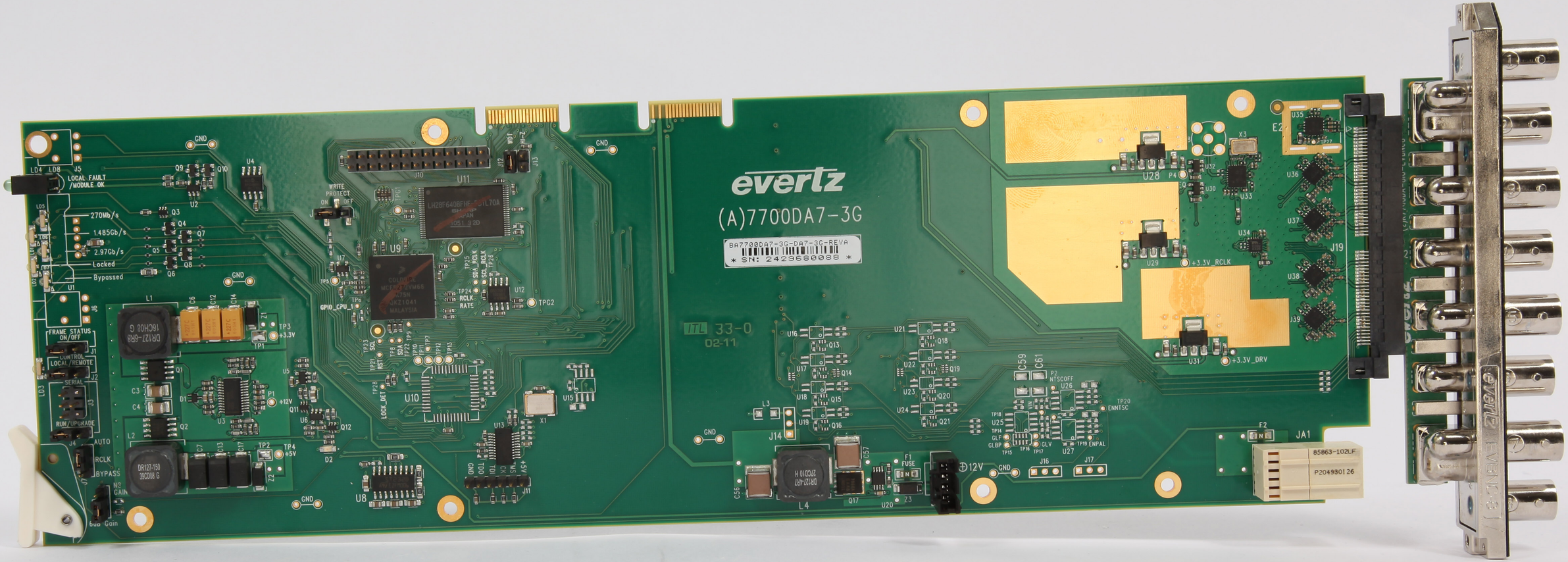
evertz
(A)7700DA7-3G
BA7700DA7-3G-DA7-3G-REVA
* SN: 2429680088 *
LOCAL FAULT /MODULE OK
270Mb/s
1.485Gb/s
2.97Gb/s
Locked
Bypassed
FRAME STATUS ON/OFF
CONTROL LOCAL/REMOTE
SERIAL
RUN/UPGRADE
AUTO
RCLK
BYPASS
WRITE PROTECT
GND
+3.3V_RCLK
+3.3V_DRV
+12V
12V
JA1
85863-102LF
P204930126

evertz
(A)7700DA7-3G
270Mb/s
1.485Gb/s
2.97Gb/s
Locked
Bypassed
WRITE PROTECT
ON OFF
FRAME STATUS ON/OFF
LOCAL/REMOTE
RUN/UPGRADE
7700DA7-3G

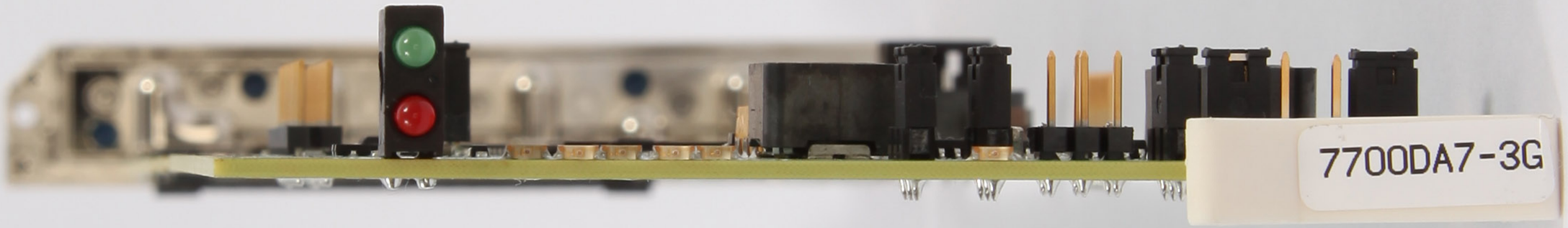
7700DA7-3G

evertz
(A)77000A7-3G

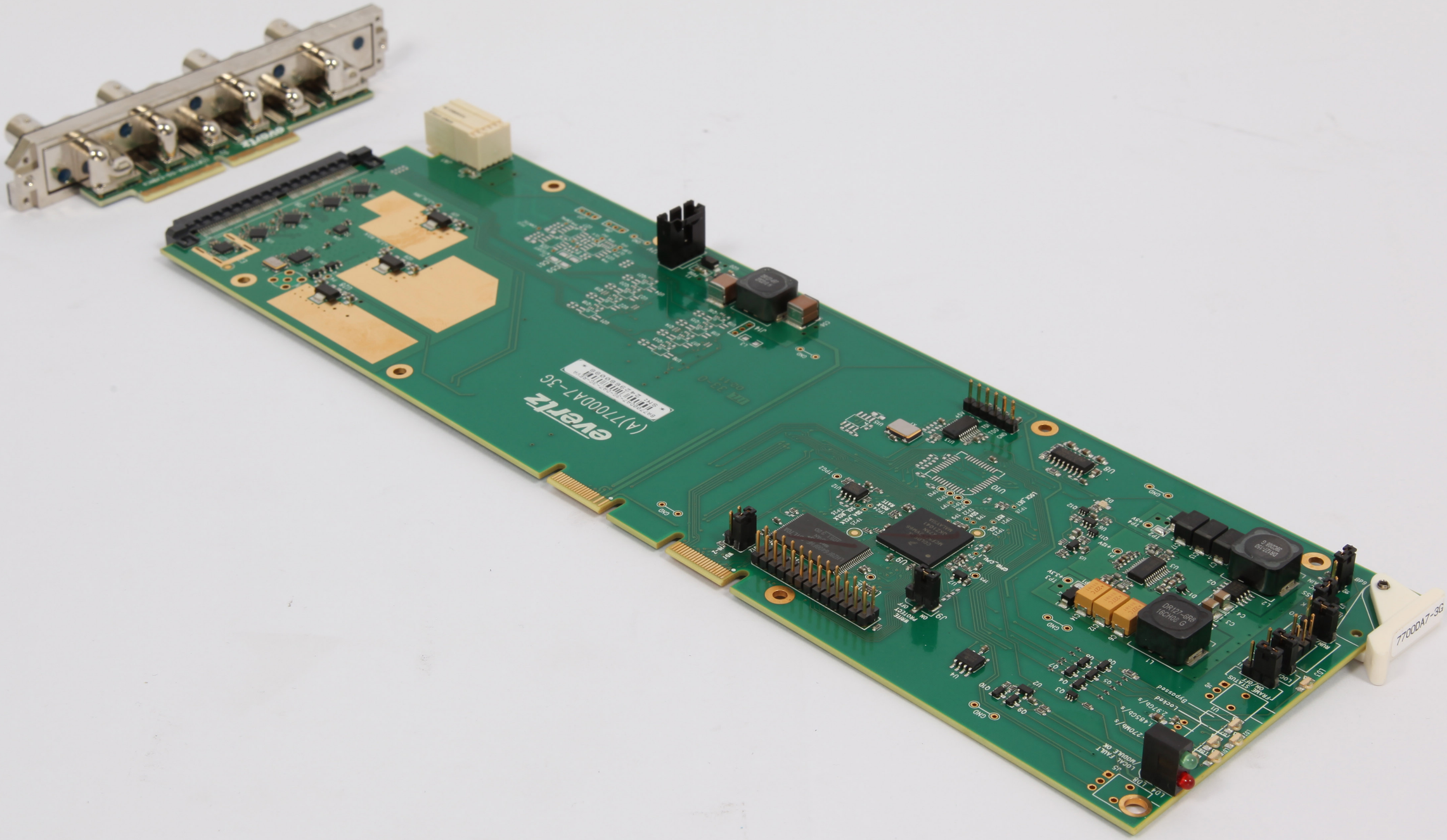
everlitz
(A)77000A7-3G
77000A7-3G